PRODUCED BY AN AUTODESK STUDENT VERSION

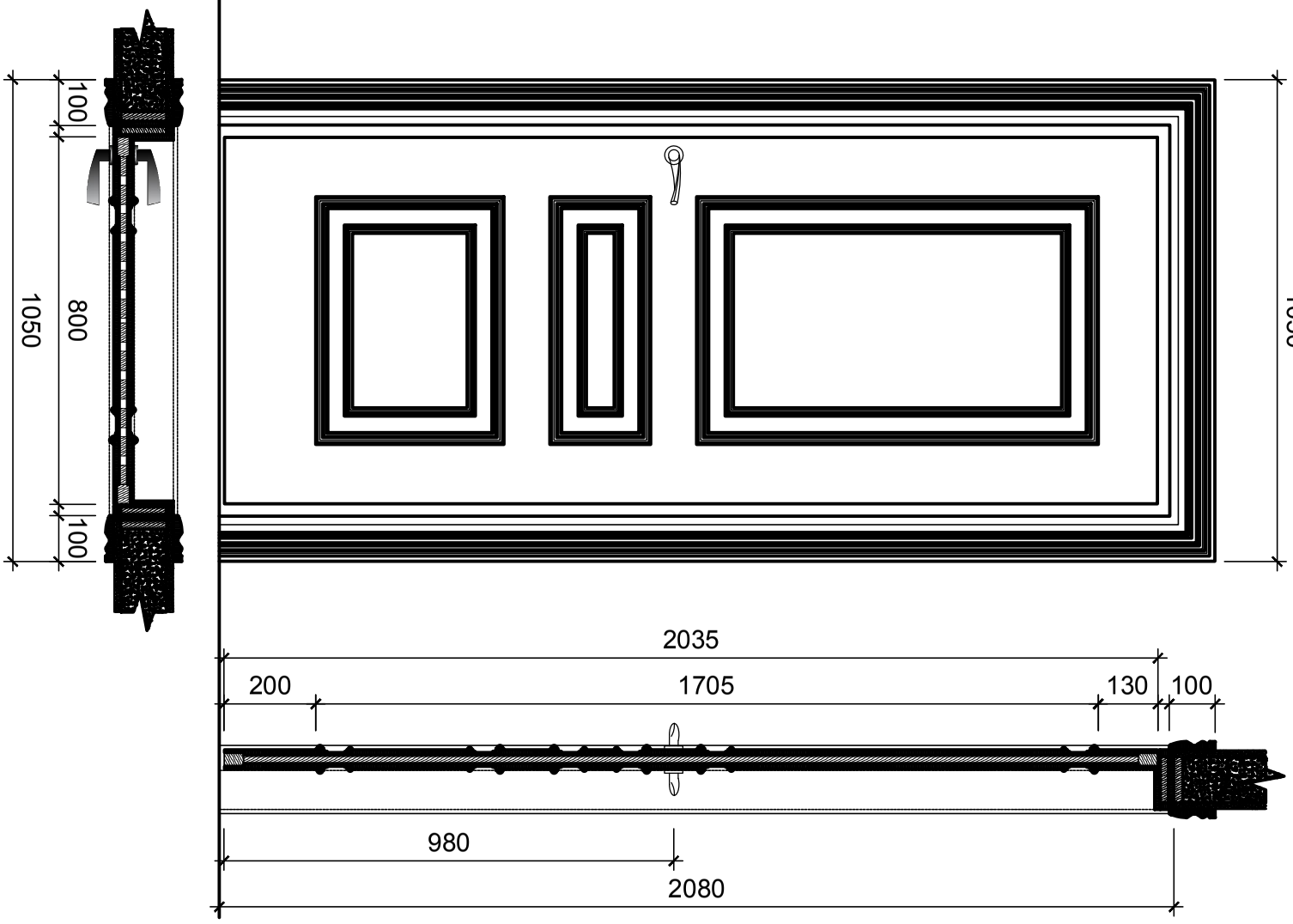

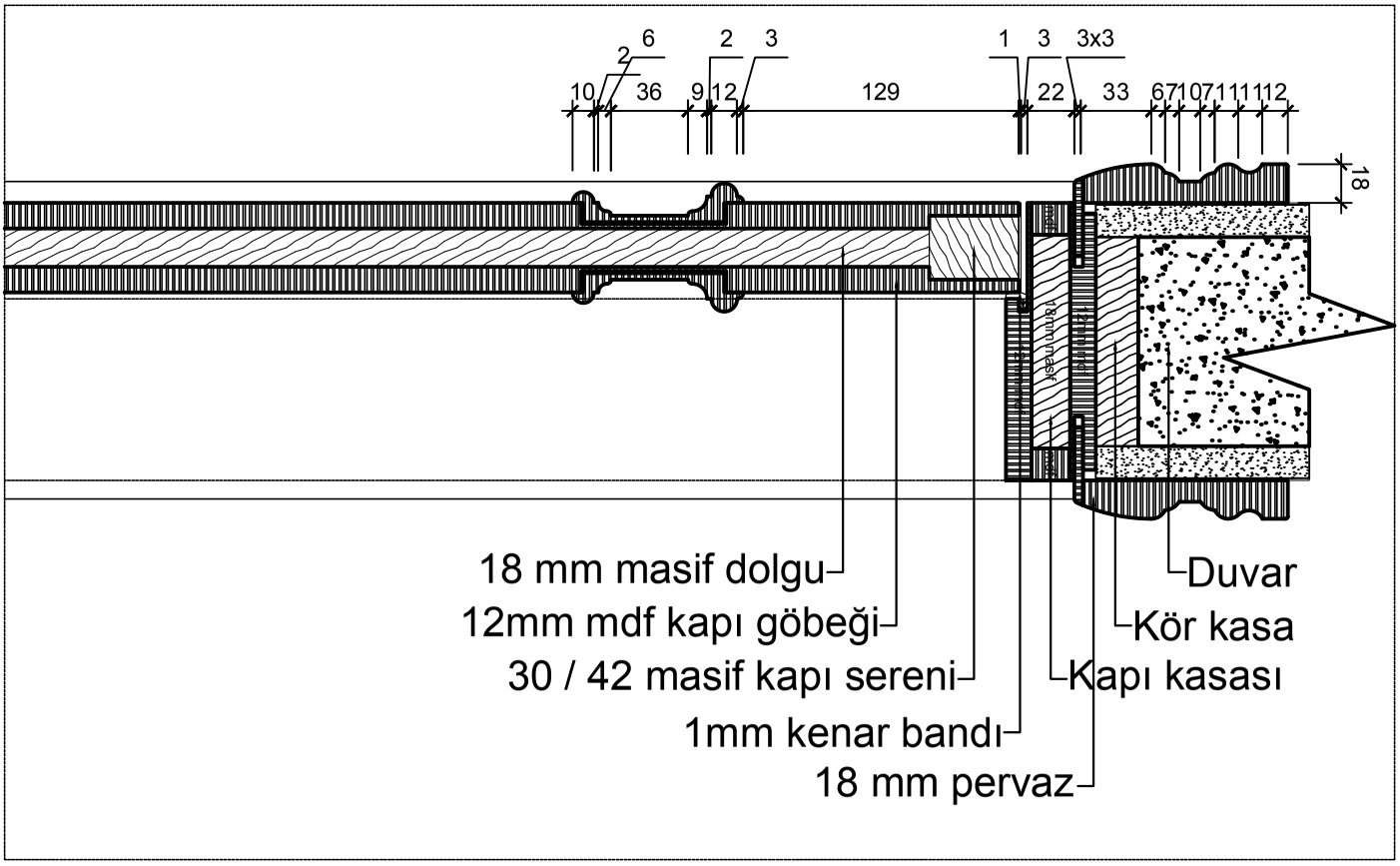

PRODUCED BY AN AUTODESK STUDENT VERSION

PRODUCED BY AN AUTODESK STUDENT VERSION

pera door ahşap kapı sistemleri	ARES - 1111	1 / 10 - A3
	Cemil Topuzlu Cad. Lalezar Sok. Dilek Apt. No:7 Fenerbahçe/Kadıköy	info@peradoor.com.tr
		+90 216 801 5090

PRODUCED BY AN AUTODESK STUDENT VERSION