PRODUCED BY AN AUTODESK STUDENT VERSION

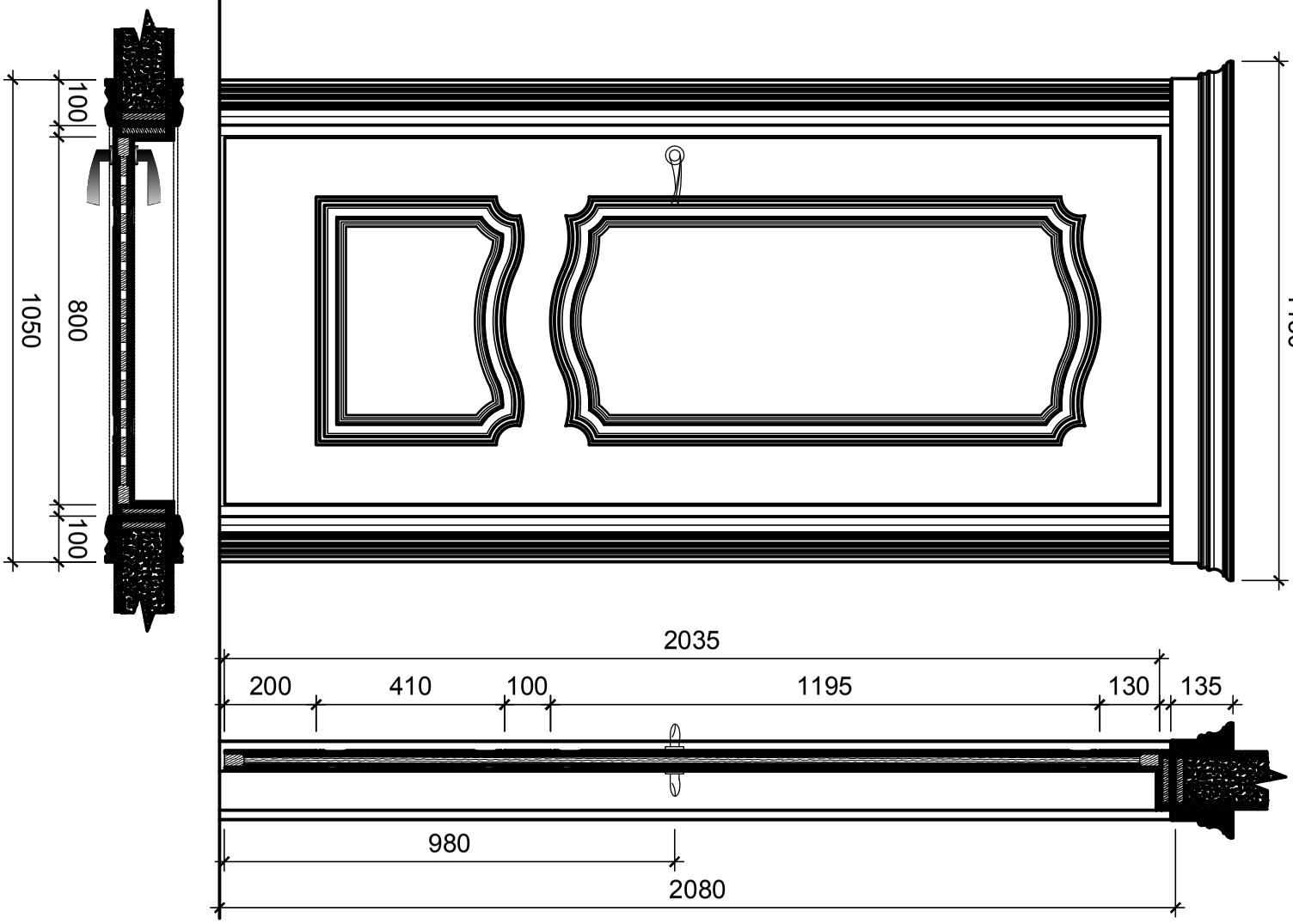

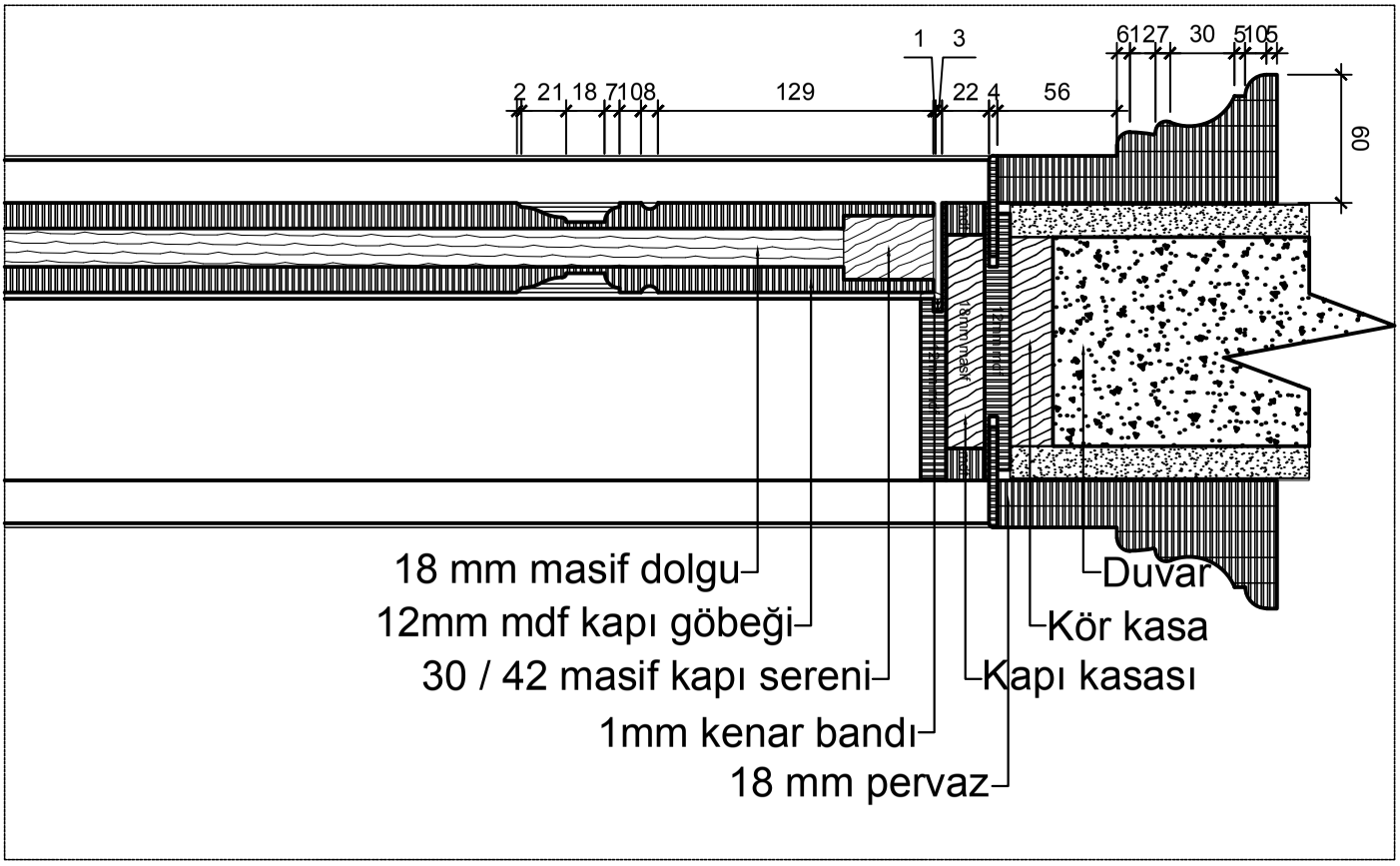

pera door
ahşap kapı sistemleri

REA - 1202

Cemil Topuzlu Cad. Lalezar Sok. Dilek Apt.
No:7 Fenerbahçe/Kadıköy

1 / 10 - A3

info@peradoor.com.tr

+90 216 801 5090

PRODUCED BY AN AUTODESK STUDENT VERSION