PRODUCED BY AN AUTODESK STUDENT VERSION

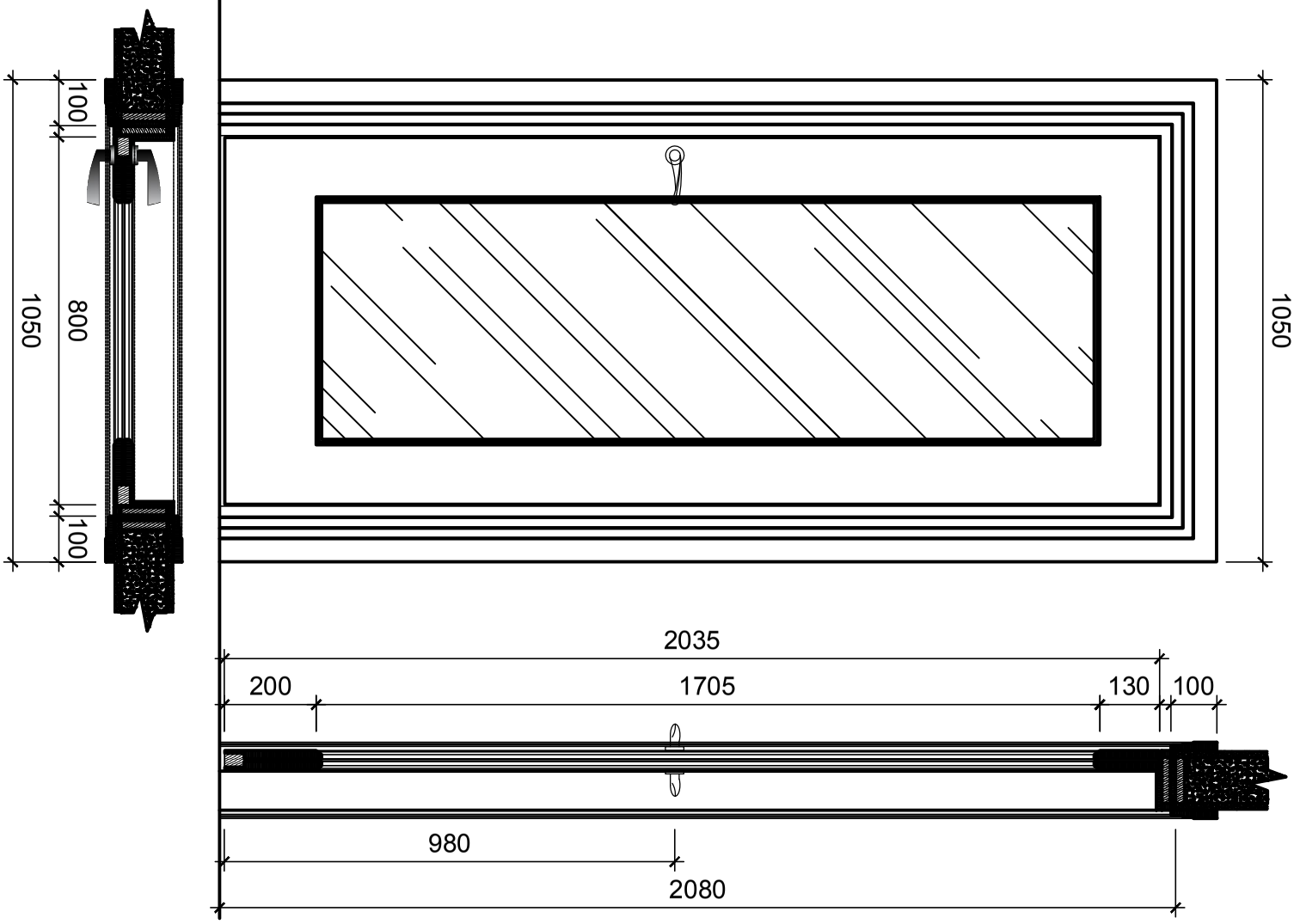

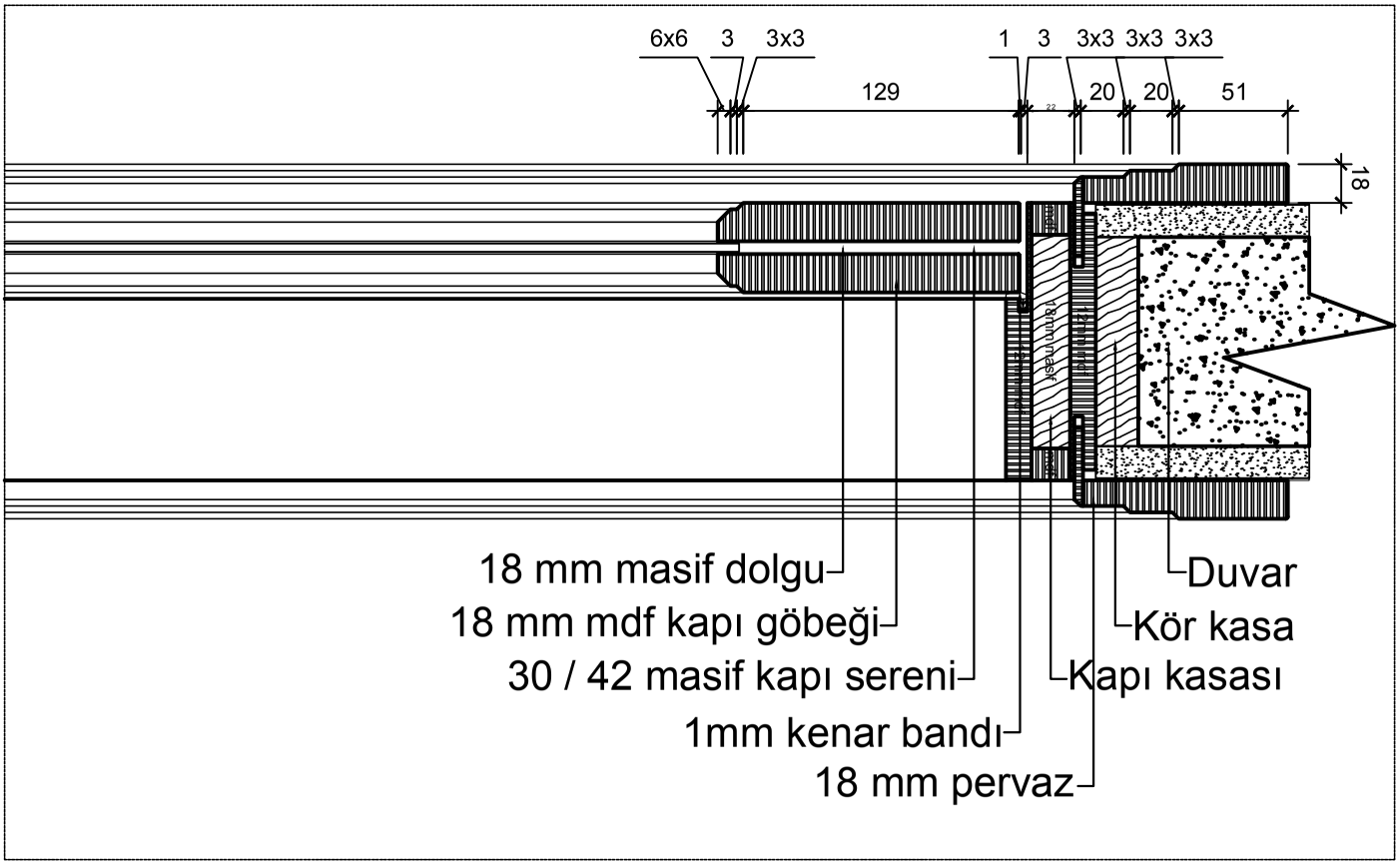

PRODUCED BY AN AUTODESK STUDENT VERSION

PRODUCED BY AN AUTODESK STUDENT VERSION

pera door
ahşap kapı sistemleri

ATHENA - 1501	1 / 10 - A3
Cemil Topuzlu Cad. Lalezar Sok. Dilek Apt. No:7 Fenerbahçe/Kadıköy	info@peradoor.com.tr +90 216 801 5090

PRODUCED BY AN AUTODESK STUDENT VERSION