PRODUCED BY AN AUTODESK STUDENT VERSION

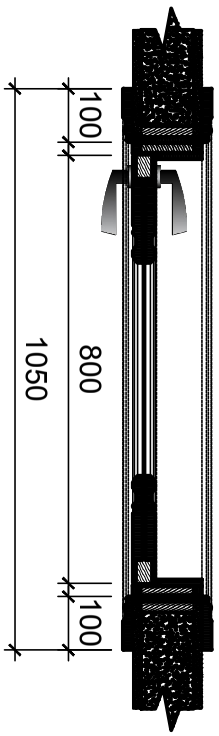

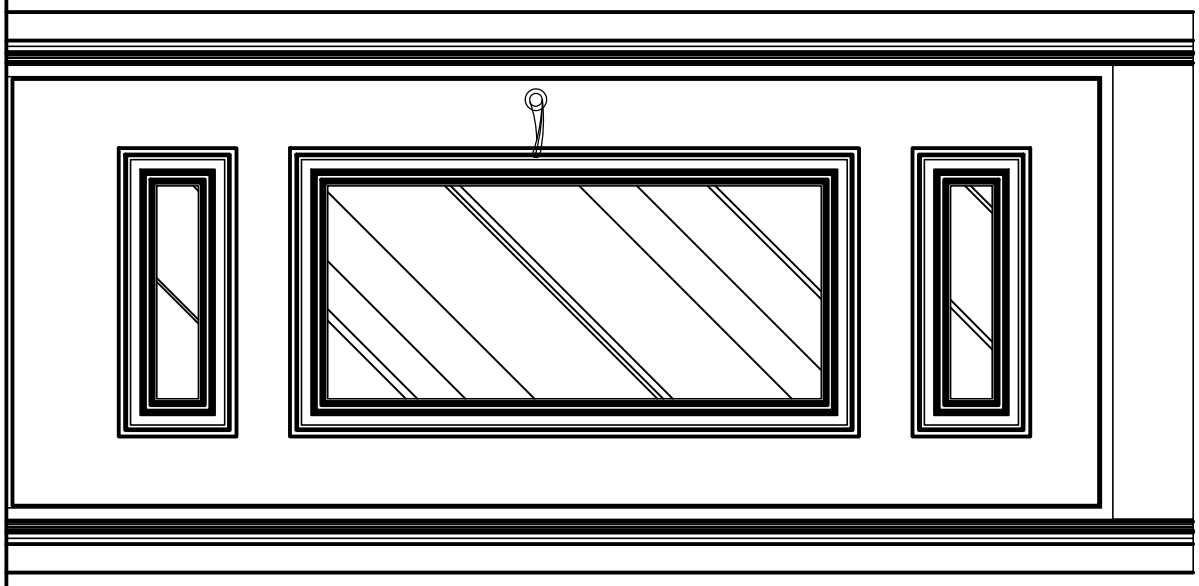

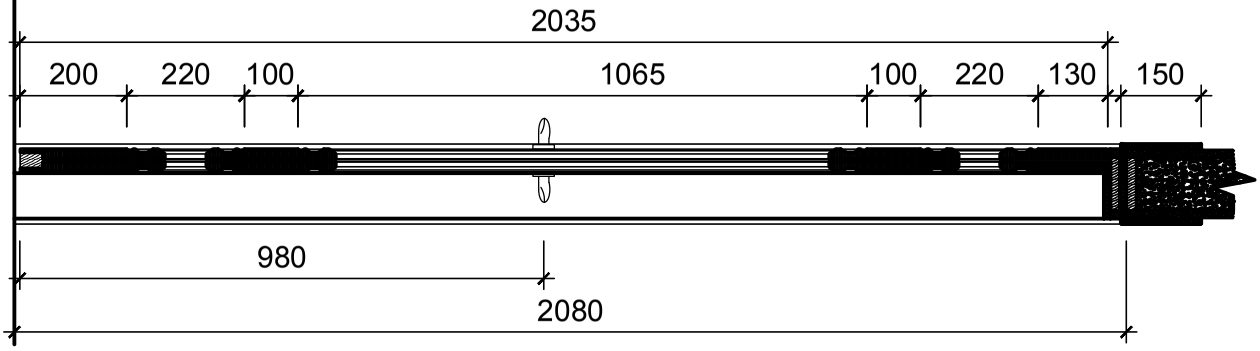

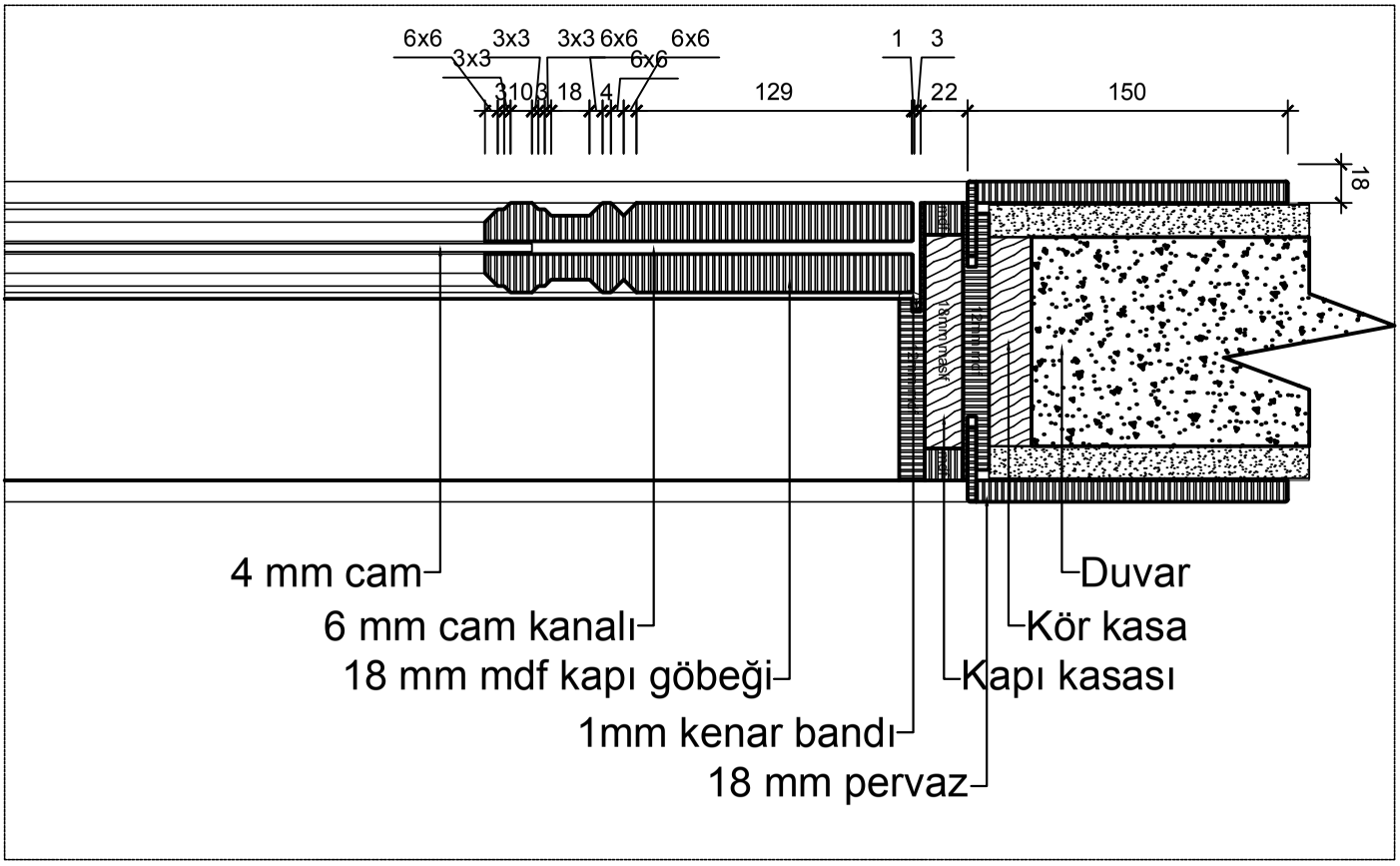

PRODUCED BY AN AUTODESK STUDENT VERSION

PRODUCED BY AN AUTODESK STUDENT VERSION

PRODUCED BY AN AUTODESK STUDENT VERSION

pera door
ahşap kapı sistemleri

VESTA - 1609	1 / 10 - A3
Cemil Topuzlu Cad. Lalezar Sok. Dilek Apt. No:7 Fenerbahçe/Kadıköy	info@peradoor.com.tr
	+90 216 801 5090